MISCELLANEOUS DRAWINGS

← TO SORODA

TO DARINGBADI →

DETAILS OF SUPERELEVATION

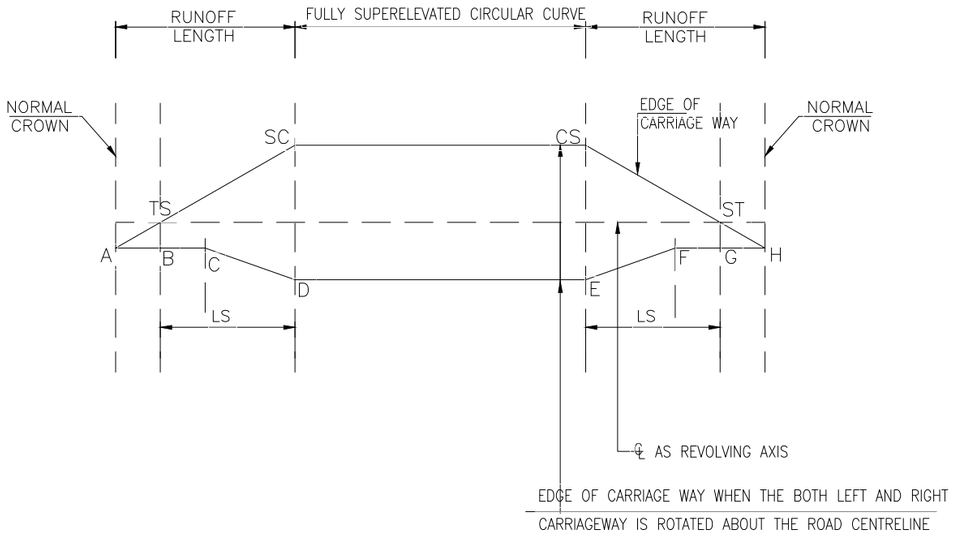

FOR CURVILINEAR SECTION WITH TRANSITION CURVE

DETAILS OF VERTICAL CURVE

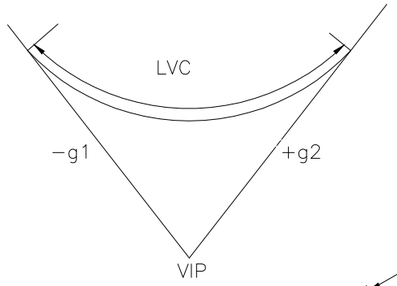

FOR VALLEY CURVE

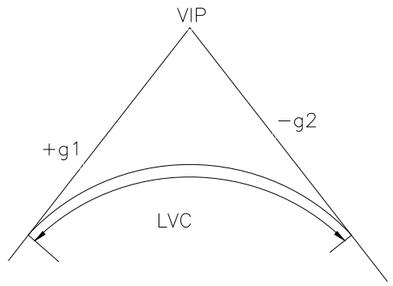

FOR SUMMIT CURVE

DETAILS OF HORIZONTAL CURVE

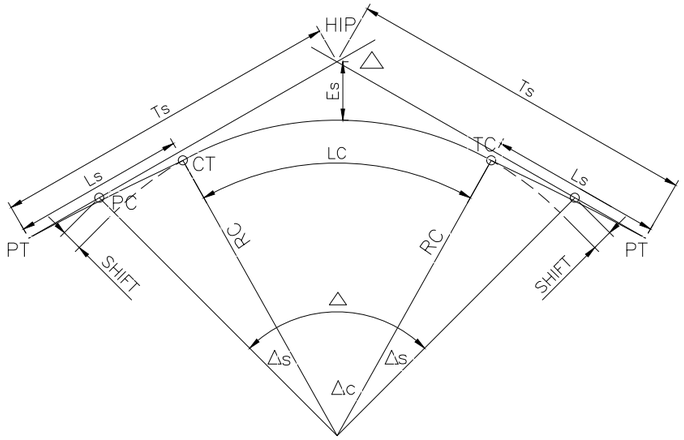

FOR CIRCULAR CURVE IN TRANSITION

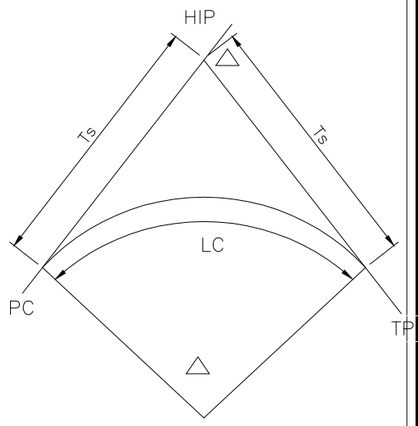

FOR CIRCULAR CURVE

LEGEND :

TS	TANGENT TO SPIRAL	Ls	LENGTH OF TRANSITION	HIP	HORIZONTAL INTERSECTION POINT
SC	SPIRAL TO CURVE	Ts	TANGENT DISTANCE	L	RUNOFF LENGTH
CS	CURVE TO SPIRAL	Δs	DEVIATION ANGLE OF TRANSITION CURVE	△	TOTAL DEVIATION ANGLE
ST	SPIRAL TO TANGENT	Δc	DEVIATION ANGLE OF CIRCULAR CURVE	LC	LENGTH OF HORIZONTAL CURVE
PC	POINT OF CURVATURE	LVC	LENGTH OF VERTICAL CURVE	Es	APEX DISTANCE
PT	POINT OF TANGENT	g1	VERTICAL GRADIENT		

CLIENT	PROJECT NAME	DRAWING TITLE	DESIGN CONSULTANT	SCALE				
EXECUTIVE ENGINEER NH DIVISION BERHAMPUR	CONSULTANCY SERVICES FOR FEASIBILITY STUDY AND PREPARATION OF DETAILED PROJECT REPORT FOR DARINGBADI GHAT PORTION FROM KM 231/000 TO 256/880 (WORK START FROM KM 229/500 TO KM 256/178) OF NH-59 IN THE STATE OF ODISHA	TYPICAL DETAILS OF HORIZONTAL, VERTICAL CURVE & SUPER ELEVATION	The CADD™ Where Technology Moves with Time. Accr. No. M3111204IN ISO-9001 : 2008 Certified CADD Consulting Engineers Pvt.Ltd. (Architects,Engineers,Surveyors & Consultants) N1/270,IRC Village,Nayapalli,Bhubaneswar-15,Odisha,India Ph - 0674-2553518,Web:www.thecaddconsulting.com	NTS	Drawn. by	D. Asish Rao	Date	05 SEPT 2023
					Chkd. by	Swabhimaan Sahu	Drg. No.	CADD/DBP/DTC/A2/01/2023-24
					Aprvd. by			

← TO SORODA

TO DARINGBADI →

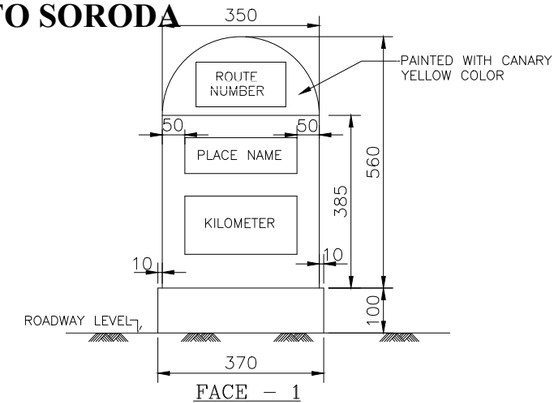

FACE – 1

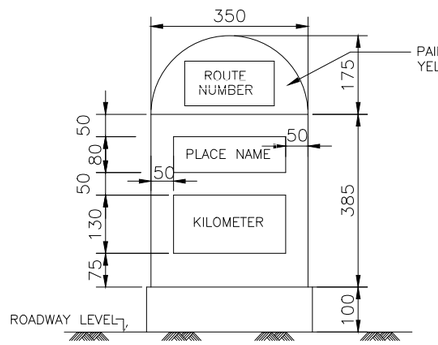

FACE – 2

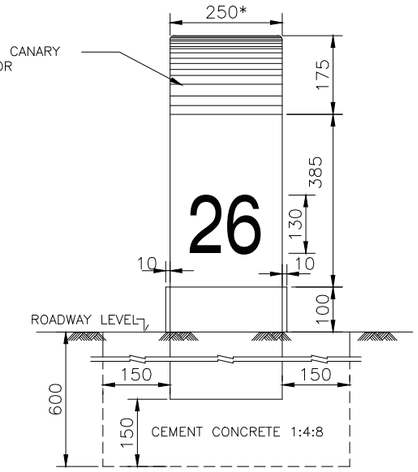

SIDE ELEVATION

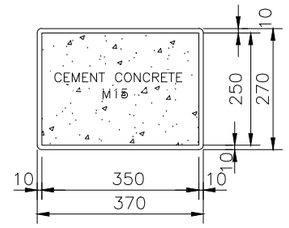

SECTION PLAN

TYPICAL DESIGN OF ORDINARY KILOMETRE STONE

NOTE:– THICKNESS MAY VARY DEPENDING ON THE MATERIAL USED

BAR BENDING SCHEDULE					
Sr.No.	Type of MS Bar	No.of Bars	Shape of Bars	Dia. in mm	Length of MS bar including hooks
1	Main Bars	2		6mm	1.84m
2	Topmost stirrup	1		6mm	370mm
3	Stirrup (First from top)	1		6mm	405mm
4	Stirrup (Second from top)	1		6mm	440mm
5	Striiup (Third from top)	1		6mm	475mm
6	Bottom most stirrup	1		6mm	810mm

NOTES:

1. All Dimensions are in mm unless otherwise indicated.
2. Background colour shall be white with black letters & numerals for numbers of stations & distances.
3. Standards for letter & number sizes for all km shall be as per IRC: 8–1980
4. Size of numbers for 200m stones shall be as per IRC: 26–1967
5. Details of Boundary stones shall be as per IRC: 25–1967
6. The stones shall be provided on left side of road as shown independently for each direction of traffic flow.

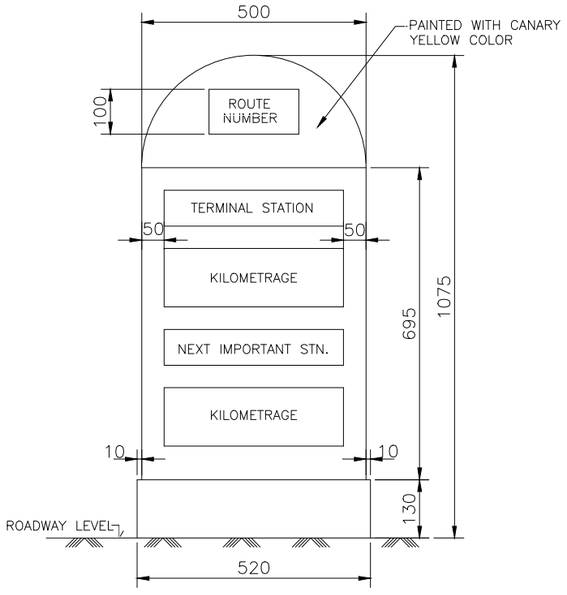

FACE – 1

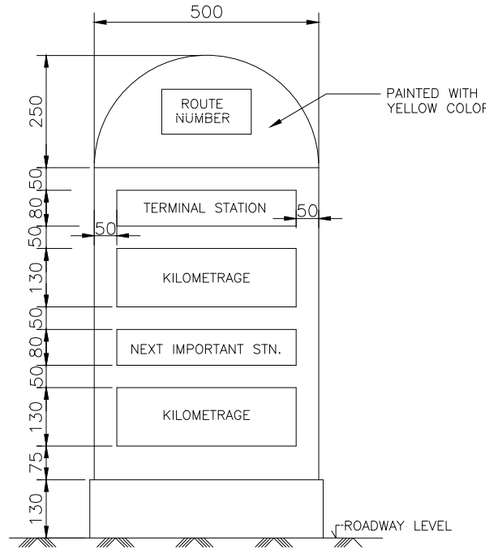

FACE – 2

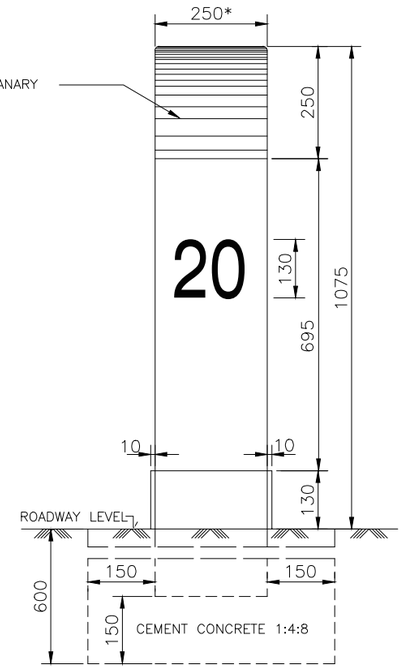

SIDE ELEVATION

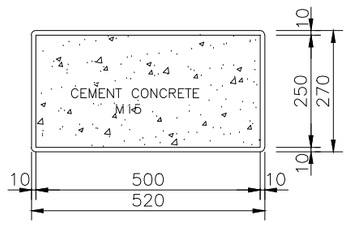

SECTION PLAN

TYPICAL DESIGN OF 5TH KILOMETRE STONE

NOTE:– THICKNESS MAY VARY DEPENDING ON THE MATERIAL USED

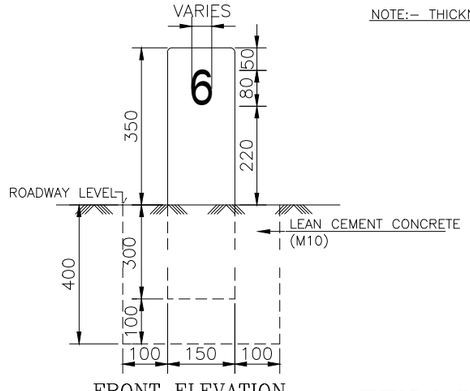

FRONT ELEVATION

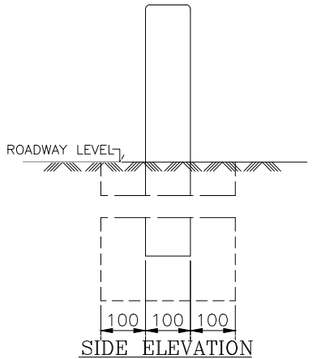

SIDE ELEVATION

TYPICAL DESIGN OF 200 METERE STONE

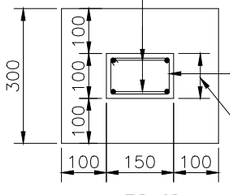

PLAN

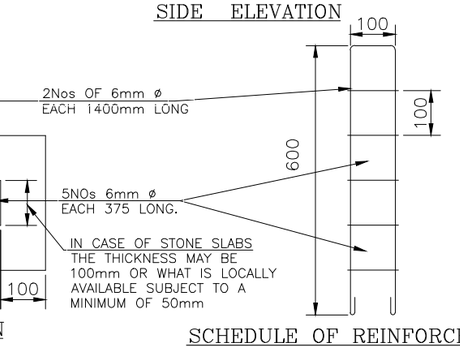

SCHEDULE OF REINFORCEMENT WHEN R.C.C IS USED

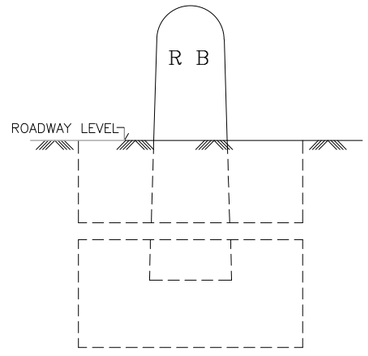

ELEVATION

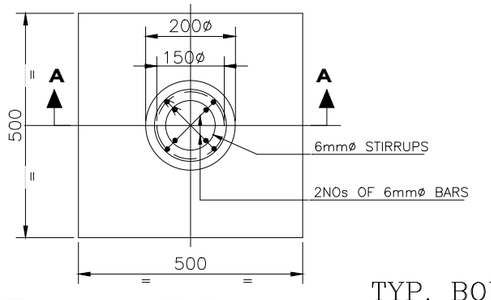

PLAN

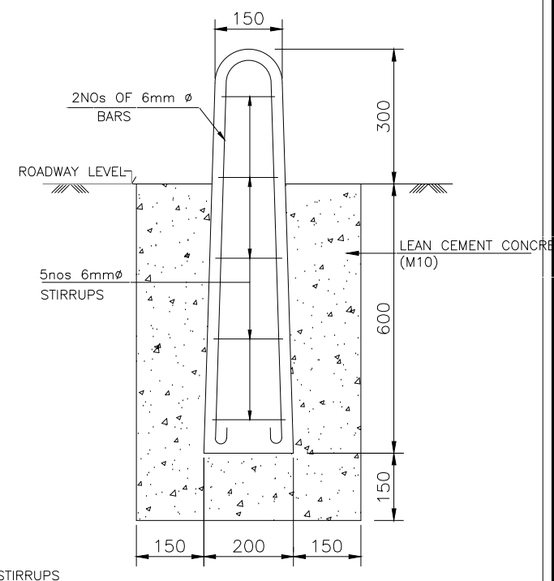

SECTION A–A

TYP. BOUNDARY STONE DESIGN WITH R.C.C AS MATERIAL

CLIENT	PROJECT NAME	DRAWING TITLE	DESIGN CONSULTANT	SCALE				
EXECUTIVE ENGINEER NH DIVISION BERHAMPUR	CONSULTANCY SERVICES FOR FEASIBILITY STUDY AND PREPARATION OF DETAILED PROJECT REPORT FOR DARINGBADI GHAT PORTION FROM KM 231/000 TO 256/880 (WORK START FROM KM 229/500 TO KM 256/178) OF NH-59 IN THE STATE OF ODISHA	STANDARD DRAWING OF KILOMETRE STONE, 200M STONE AND BOUNDARY STONE	The CADD Where Technology Moves with Time; Accr. No. M3111204IN ISO-9001 : 2008 Certified; CADD Consulting Engineers Pvt.Ltd. (Architects,Engineers,Surveyors & Consultants) N1/270,IRC Village,Nayapalli,Bhubaneswar-15,Odisha,India Ph - 0674-2553518,Web:www.thecaddconsulting.com	NTS	Drawn. by	D. Asish Rao	Date	05 SEPT 2023
					Chkd. by	Swabhimaan Sahu		
					Aprvd. by		Drg. No.	CADD/DBP/KS/A2/02/2023-24

← TO SORODA

TO DARINGBADI →

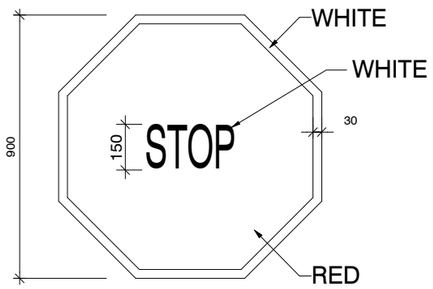

MS-1 STOP SIGN

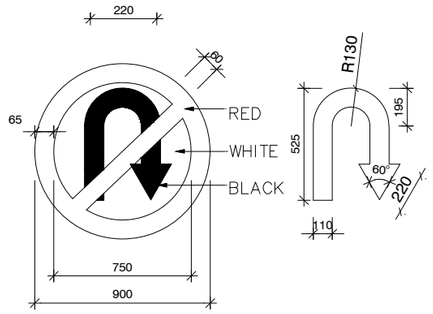

MS-2 U-TURN PROHIBITED

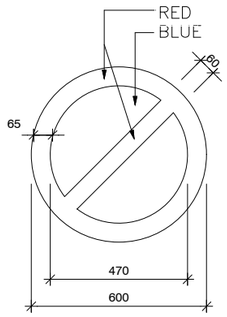

MS-3 NO PARKING SIGN

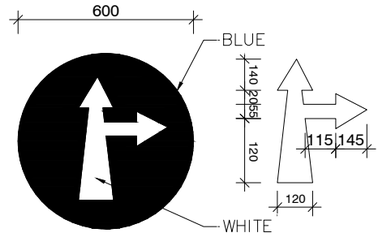

COMPULSORY AHEAD OR TURN RIGHT

MS-4

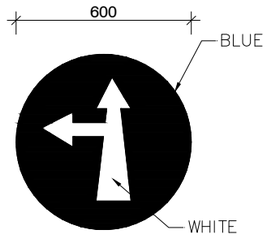

COMPULSORY AHEAD OR TURN LEFT

MS-5

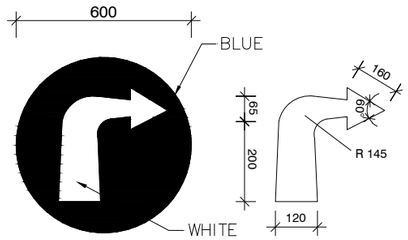

COMPULSORY TURN RIGHT

MS-6

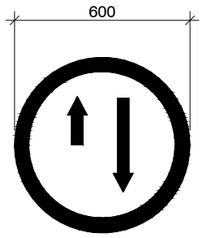

PRIORITY TO VEHICLES IN OTHER DIRECTION

MS-7

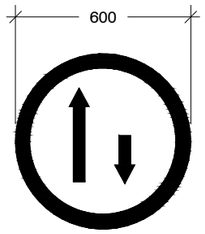

PRIORITY TO VEHICLES IN THIS DIRECTION

MS-8

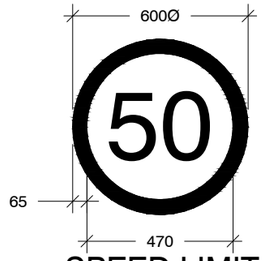

SPEED LIMIT

MS-9

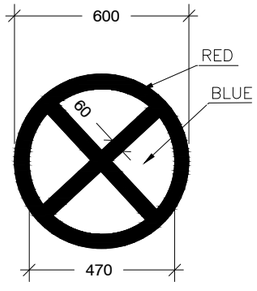

NO STOPPING OR STANDING

MS-10

NOTES :

1. ALL DIMENSIONS ARE IN MILLI METRES UNLESS OTHERWISE STATED.
2. TYPICAL DIMENSIONS AND COLOR SCHEMES FOR VARIOUS SIGNS ARE SHOWN ON THE DRAWING. HOWEVER FOR DETAILED CHARACTERISTICS OF ROAD SIGNS, RELEVANT IRC AND MOST CODES/ GUIDELINES SHALL BE REFERRED.

CLIENT	PROJECT NAME	DRAWING TITLE	DESIGN CONSULTANT	SCALE				
EXECUTIVE ENGINEER NH DIVISION BERHAMPUR	CONSULTANCY SERVICES FOR FEASIBILITY STUDY AND PREPARATION OF DETAILED PROJECT REPORT FOR DARINGBADI GHAT PORTION FROM KM 231/000 TO 256/880 (WORK START FROM KM 229/500 TO KM 256/178) OF NH-59 IN THE STATE OF ODISHA	ROAD SIGNS (MANDATORY SIGNS)	The CADD™ Where Technology Moves with Time Accr. No. M3111204IN ISO-9001 : 2008 Certified CADD Consulting Engineers Pvt.Ltd. (Architects,Engineers,Surveyors & Consultants) N1/270,IRC Village,Nayapalli,Bhubaneswar-15,Odisha,India Ph - 0674-2553518,Web:www.thecaddconsulting.com	NTS	Drawn. by	D. Asish Rao	Date	05 SEPT 2023
					Chkd. by	Swabhimaan Sahu	Drg. No.	CADD/NB/RS/A2/03/2023-24
					Aprvd. by			

← TO SORODA

TO DARINGBADI →

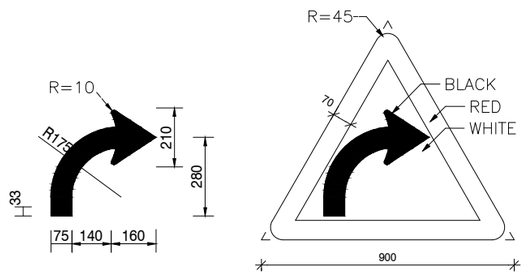

WS-1 RIGHT HAND CURVE

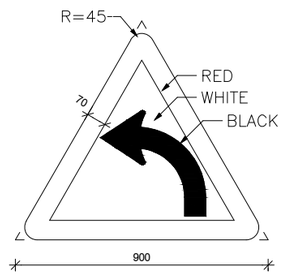

WS-2 LEFT HAND CURVE

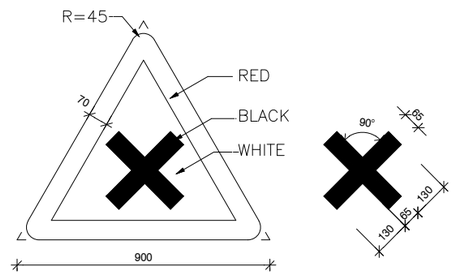

WS-3 CROSS ROAD

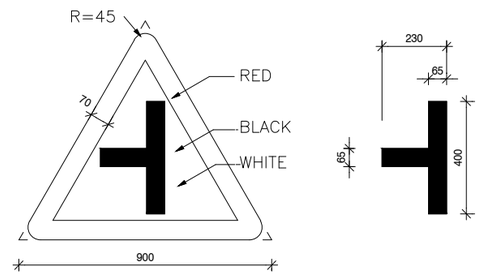

WS-4 SIDE ROAD ON LEFT

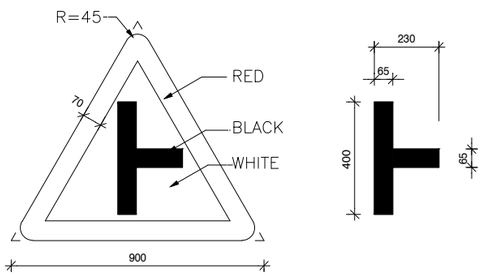

WS-5 SIDE ROAD ON RIGHT

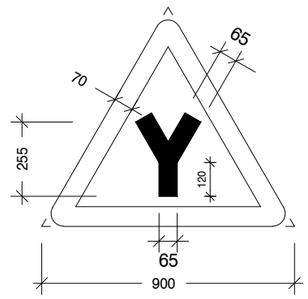

WS-7

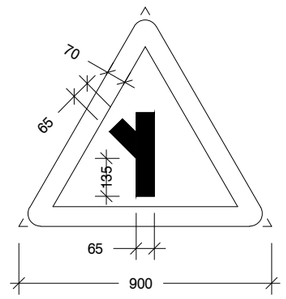

WS-8

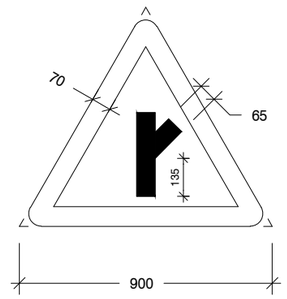

WS-9

INTERSECTIONS

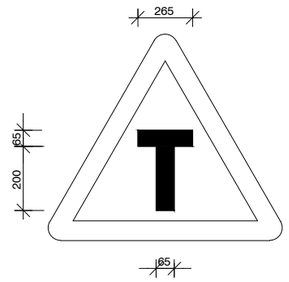

WS-6 T-INTERSECTION

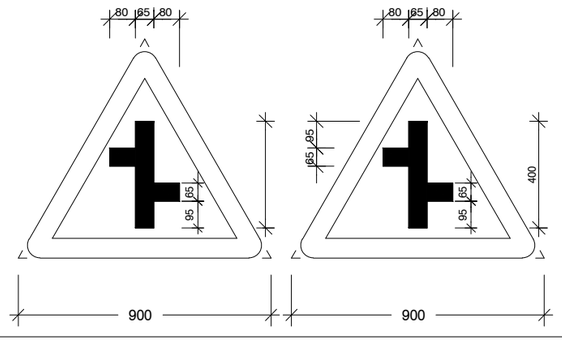

WS-7 STAGGERED INTERSECTION

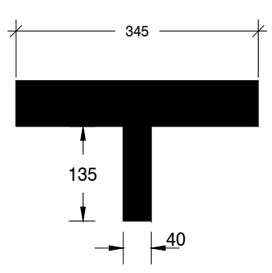

WS-11

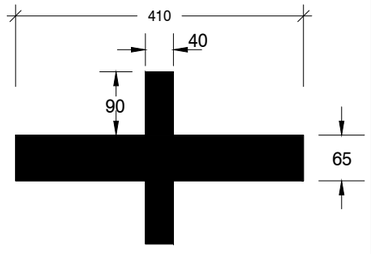

WS-12

MAJOR ROAD AHEAD

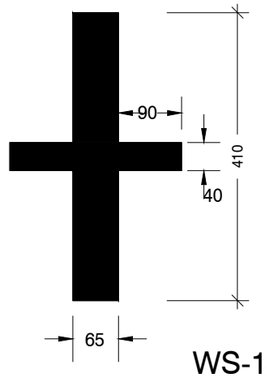

WS-13

WS-8 MINOR ROAD AHEAD

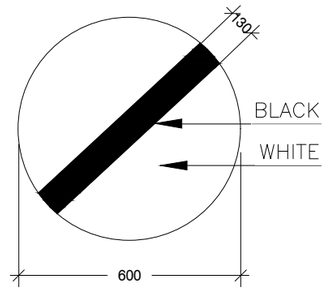

WS-9 RESTRICTION END

NOTES :

1. ALL THE DIMENSIONS ARE IN MM UNLESS OTHERWISE SPECIFIED.

CLIENT	PROJECT NAME	DRAWING TITLE	DESIGN CONSULTANT	SCALE				
EXECUTIVE ENGINEER NH DIVISION BERHAMPUR	CONSULTANCY SERVICES FOR FEASIBILITY STUDY AND PREPARATION OF DETAILED PROJECT REPORT FOR DARINGBADI GHAT PORTION FROM KM 231/000 TO 256/880 (WORK START FROM KM 229/500 TO KM 256/178) OF NH-59 IN THE STATE OF ODISHA	ROAD SIGNS (WARNING SIGNS)	The CADD™ Where Technology Moves with Time Accr. No. M3111204IN ISO-9001 : 2008 Certified CADD Consulting Engineers Pvt.Ltd. (Architects,Engineers,Surveyors & Consultants) N1/270,IRC Village,Nayapalli,Bhubaneswar-15,Odisha,India Ph - 0674-2553518,Web:www.thecaddconsulting.com	NTS	Drawn. by	D. Asish Rao	Date	05 SEPT 2023
					Chkd. by	Swabhimaan Sahu	Drg. No.	CADD/DBP/RS/A2/04/2023-24
					Aprvd. by			

← TO SORODA

TO DARINGBADI →

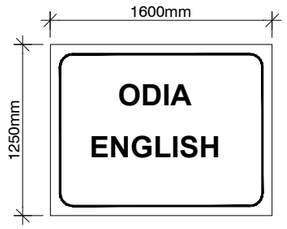

PLACE IDENTIFICATION

IS-1

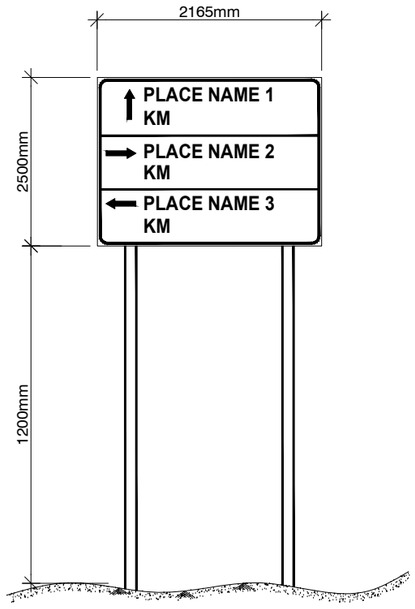

DESTINATION SIGN

IS-2

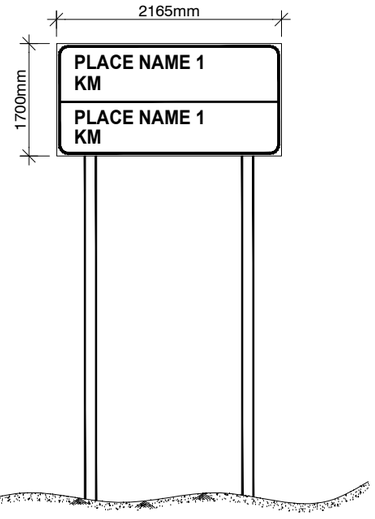

RE-ASSURANCE SIGN

IS-3

NOTES :

1. ALL THE DIMENSIONS ARE IN MM UNLESS OTHERWISE SPECIFIED.

CLIENT	PROJECT NAME	DRAWING TITLE	DESIGN CONSULTANT	SCALE				
EXECUTIVE ENGINEER NH DIVISION BERHAMPUR	CONSULTANCY SERVICES FOR FEASIBILITY STUDY AND PREPARATION OF DETAILED PROJECT REPORT FOR DARINGBADI GHAT PORTION FROM KM 231/000 TO 256/880 (WORK START FROM KM 229/500 TO KM 256/178) OF NH-59 IN THE STATE OF ODISHA	ROAD SIGNS (INFORMATORY SIGNS)	The CADD™ Where Technology Moves with Time Accr. No. M3111204IN ISO-9001 : 2008 Certified CADD Consulting Engineers Pvt.Ltd. (Architects,Engineers,Surveyors & Consultants) N1/270,IRC Village,Nayapalli,Bhubaneswar-15,Odisha,India Ph - 0674-2553518,Web:www.thecaddconsulting.com	NTS	Drawn. by	D. Asish Rao	Date	05 SEPT 2023
					Chkd. by	Swabhimaan Sahu	Drg. No.	CADD/DBP/RS/A2/05/2023-24
					Aprvd. by			

← TO SORODA

TO DARINGBADI →

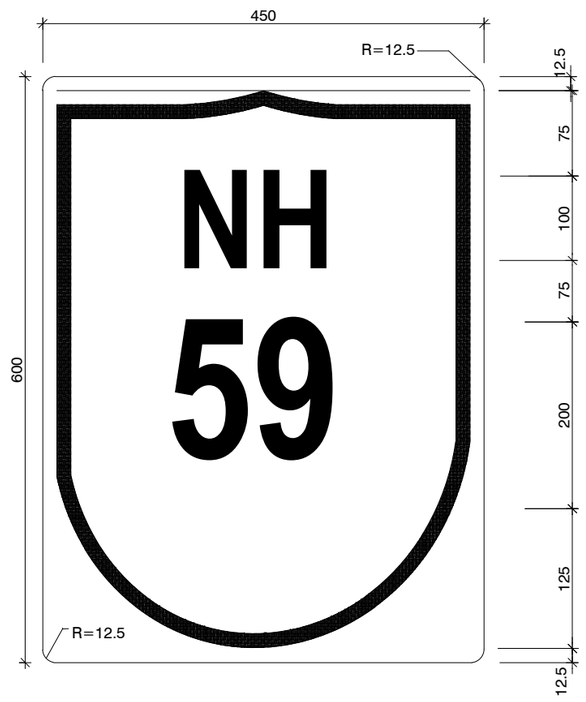

IS-4 NH. ROUTE MARKER SIGN

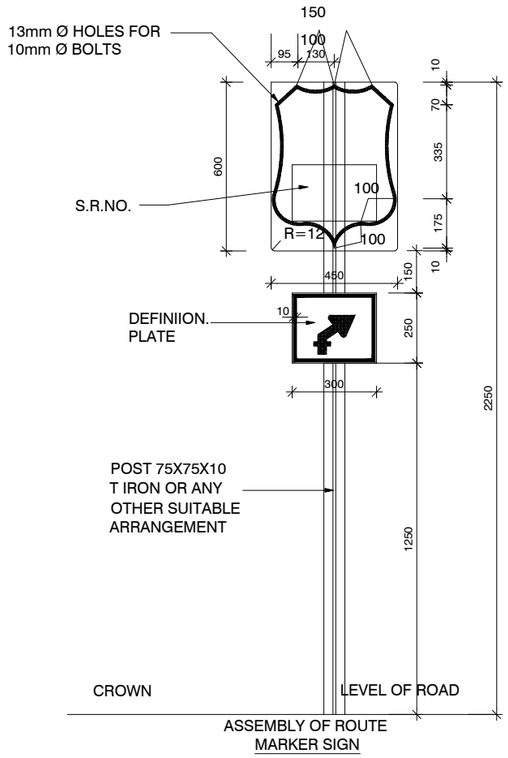

ARRANGEMENT FOR ERECTION OF
STATE ROUTE MARKER SIGN

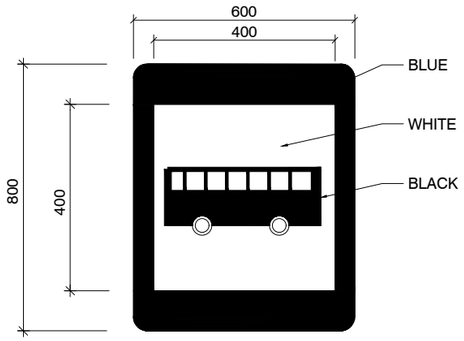

IS-5 BUS STOP SIGN

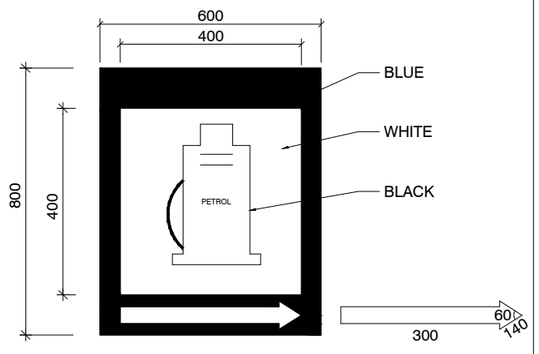

IS-6 FILLING STATION

NOTES :

1. ALL THE DIMENSIONS ARE IN MM UNLESS OTHERWISE SPECIFIED.

CLIENT	PROJECT NAME	DRAWING TITLE	DESIGN CONSULTANT	SCALE				
EXECUTIVE ENGINEER NH DIVISION BERHAMPUR	CONSULTANCY SERVICES FOR FEASIBILITY STUDY AND PREPARATION OF DETAILED PROJECT REPORT FOR DARINGBADI GHAT PORTION FROM KM 231/000 TO 256/880 (WORK START FROM KM 229/500 TO KM 256/178) OF NH-59 IN THE STATE OF ODISHA	ROAD SIGNS (INFORMATORY SIGNS)	The CADD™ Where Technology Moves with Time Accr. No. M3111204IN ISO-9001 : 2008 Certified CADD Consulting Engineers Pvt.Ltd. (Architects,Engineers,Surveyors & Consultants) N1/270,IRC Village,Nayapalli,Bhubaneswar-15,Odisha,India Ph - 0674-2553518,Web:www.thecaddconsulting.com	NTS	Drawn. by	D. Asish Rao	Date	05 SEPT 2023
					Chkd. by	Swabhimaan Sahu	Drg. No.	CADD/DBP/RS/A2/06/2023-24
					Aprvd. by			

← TO SORODA

TO DARINGBADI →

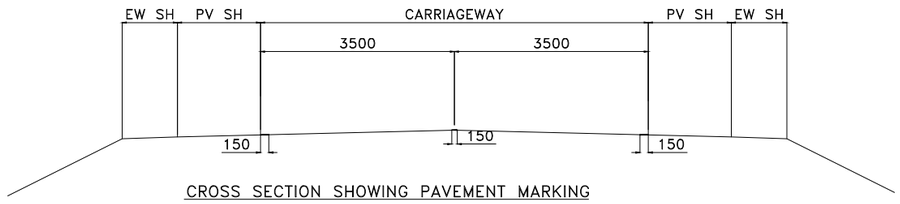

CROSS SECTION SHOWING PAVEMENT MARKING

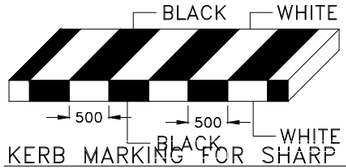

KERB MARKING FOR SHARP CURVE

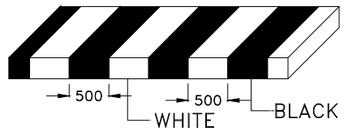

KERB MARKING FOR NORMAL SECTION

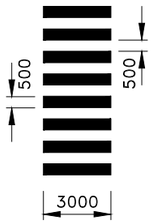

PEDESTRIAN MARKING
(3.0M LONG AND 0.5M THICK)

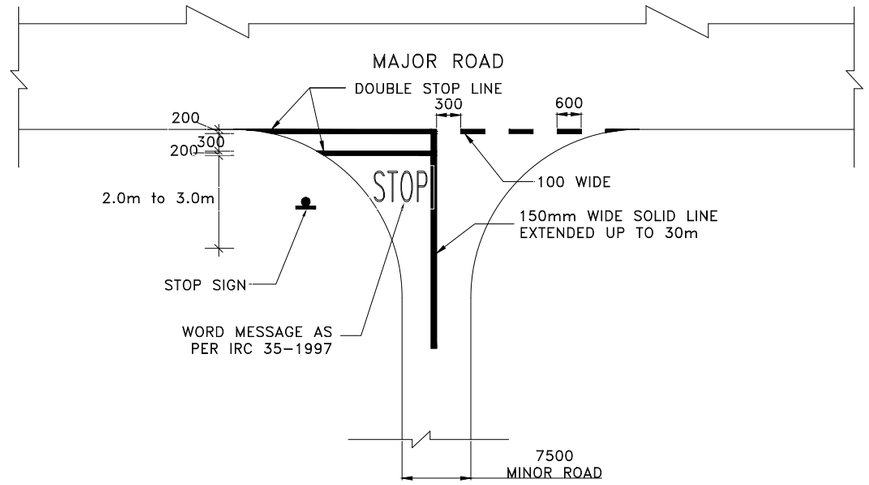

STOP CONTROLLED JUNCTION

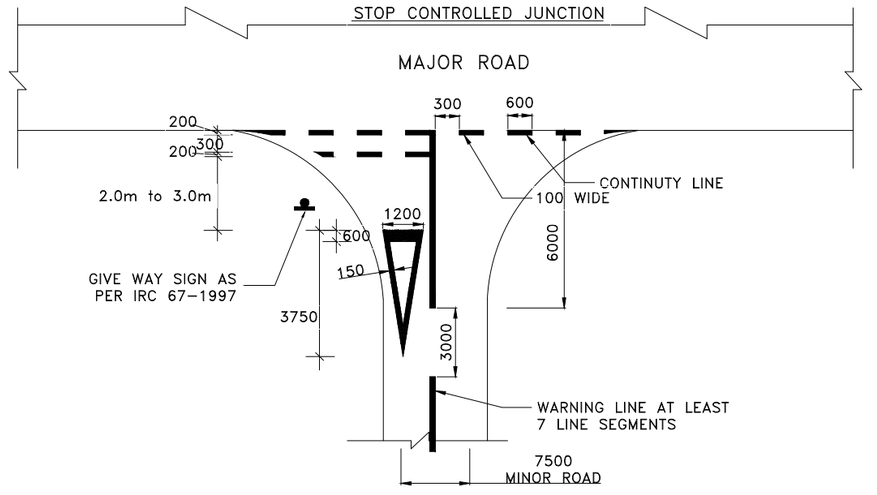

YEILD CONTROLLED JUNCTION

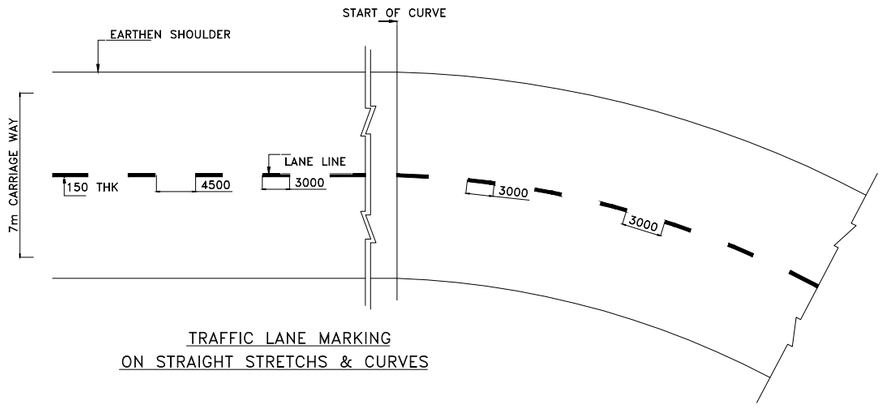

TRAFFIC LANE MARKING
ON STRAIGHT STRETCHS & CURVES

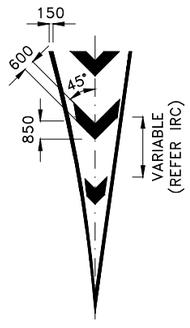

DETAILS OF CHEVRON MARKINGS

NOTES:

1. ALL DIMENSIONS ARE IN MILLIMETERS UNLESS OTHERWISE INDICATED.
2. ALL ROAD MARKING DETAILS ARE AS PER IRC: 35–1997.

CLIENT	PROJECT NAME	DRAWING TITLE	DESIGN CONSULTANT	SCALE				
EXECUTIVE ENGINEER NH DIVISION BERHAMPUR	CONSULTANCY SERVICES FOR FEASIBILITY STUDY AND PREPARATION OF DETAILED PROJECT REPORT FOR DARINGBADI GHAT PORTION FROM KM 231/000 TO 256/880 (WORK START FROM KM 229/500 TO KM 256/178) OF NH-59 IN THE STATE OF ODISHA	DETAILS OF PAVEMENT MARKINGS	The CADD Where Technology Moves with Time Accr. No. M3111204IN ISO-9001 : 2008 Certified CADD Consulting Engineers Pvt.Ltd. (Architects,Engineers,Surveyors & Consultants) N1/270,IRC Village,Nayapalli,Bhubaneswar-15,Odisha,India Ph - 0674-2553518,Web:www.thecaddconsulting.com	NTS	Drawn. by	D. Asish Rao	Date	05 SEPT 2023
					Chkd. by	Swabhimaan Sahu	Drg. No.	CADD/DBP/DPM/A2/07/2023-24
					Aprvd. by			

← TO SORODA

TO DARINGBADI →

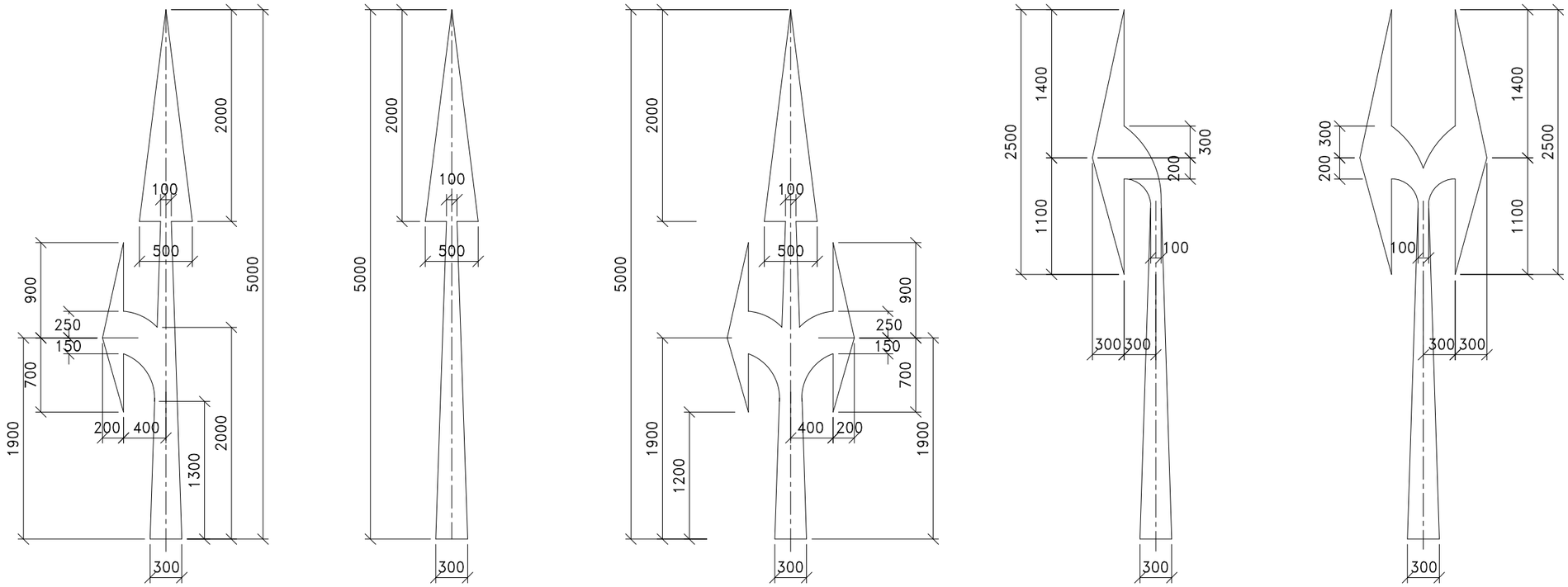

ARROW MARKING FOR ROUTE DIRECTION FOR DESIGN SPEED MORE THAN 50km/hr.

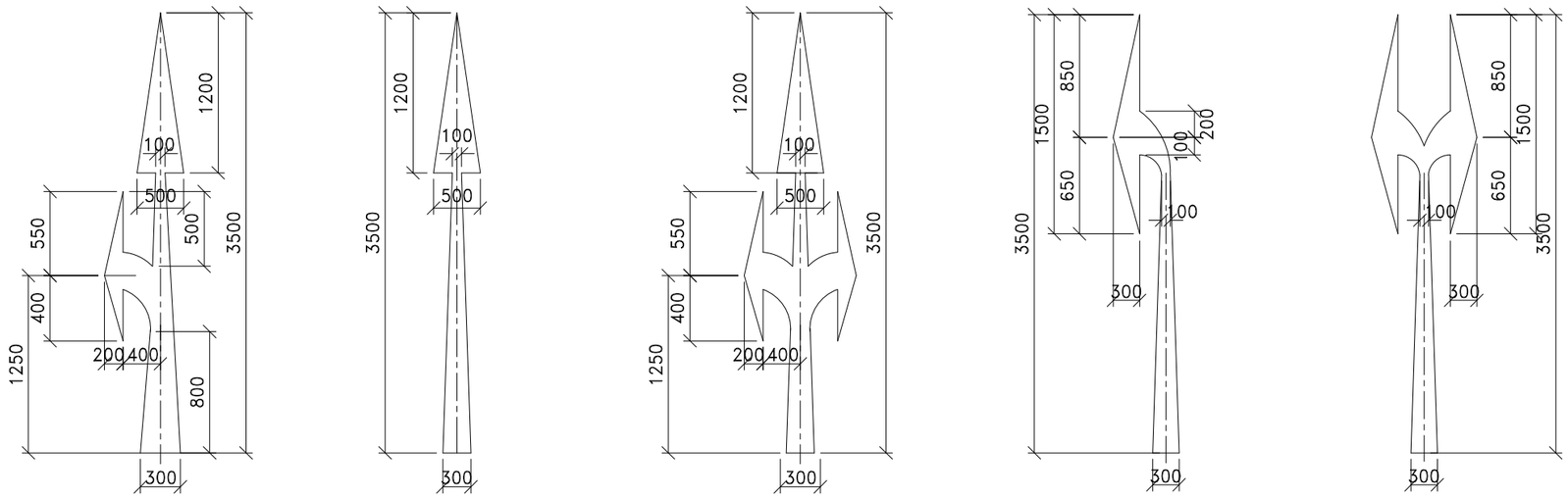

ARROW MARKING FOR ROUTE DIRECTION FOR DESIGN SPEED OF 50km/hr. OR LESS

NOTES:

1. All Dimensions are in millimeters unless otherwise stated.
2. All Road marking details are as per IRC: 35-1997.
3. All route marker signs are as per IRC 2-1968
4. All the pavement marking shall be provided confirming to IRC 35-1997 & IRC 30-1968 for the center length of the project road marking shall be hot applied thermoplastic paints with reflectonizing glass beads shall be as per relevant clauses (clause 803) of section 800 of MORTH specifications.

CLIENT	PROJECT NAME	DRAWING TITLE	DESIGN CONSULTANT	SCALE				
EXECUTIVE ENGINEER NH DIVISION BERHAMPUR	CONSULTANCY SERVICES FOR FEASIBILITY STUDY AND PREPARATION OF DETAILED PROJECT REPORT FOR DARINGBADI GHAT PORTION FROM KM 231/000 TO 256/880 (WORK START FROM KM 229/500 TO KM 256/178) OF NH-59 IN THE STATE OF ODISHA	**DETAILS OF PAVEMENT MARKINGS**	The CADD™ Where Technology Moves with Time Accr. No. M3111204IN ISO-9001 : 2008 Certified CADD Consulting Engineers Pvt.Ltd. (Architects,Engineers,Surveyors & Consultants) N1/270,IRC Village,Nayapalli,Bhubaneswar-15,Odisha,India Ph - 0674-2553518,Web:www.thecaddconsulting.com	NTS	Drawn. by	**D. Asish Rao**	Date	05 SEPT 2023
					Chkd. by	**Swabhimaan Sahu**	Drg. No.	CADD/DBP/DPM/A2/08/2023-24
					Aprvd. by			

← TO SORODA

TO DARINGBADI →

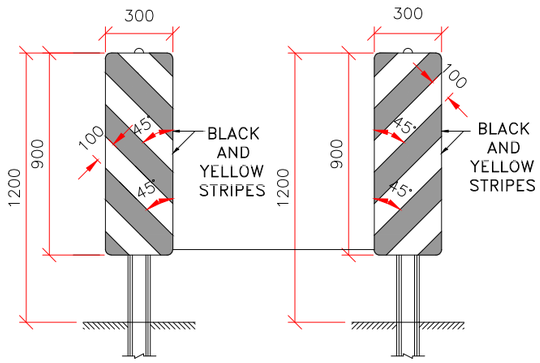

(LEFT) (RIGHT)

HAZARD MARKERS

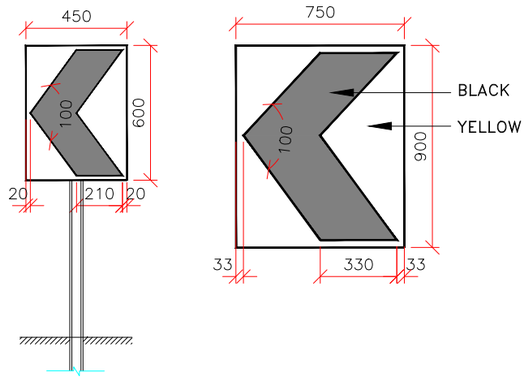

CHEVRON SIGN

Table 15.3 Spacing of Single Chevron Signs

Curve Radius(m)	Distance Between Single Chevron (m)	
	On Curve	Before Curve
50	15	30
100	20	40
200	30	60
300	45	90
400	60	120
500	70	140
>500	80	150

NOTES :

1. ALL DIMENSIONS ARE IN MILLIMETERS UNLESS OTHERWISE INDICATED.
2. ARROW ROUTE MARKERS ARE AS PER IRC 35–1997
3. ALL ROUTE MARKER SIGNS ARE AS PER IRC 2–1968
4. ROAD DELINATORS AND OBJECT MARKERS ARE AS PER IRC:79–1981

CLIENT	PROJECT NAME	DRAWING TITLE	DESIGN CONSULTANT	SCALE				
EXECUTIVE ENGINEER NH DIVISION BERHAMPUR	CONSULTANCY SERVICES FOR FEASIBILITY STUDY AND PREPARATION OF DETAILED PROJECT REPORT FOR DARINGBADI GHAT PORTION FROM KM 231/000 TO 256/880 (WORK START FROM KM 229/500 TO KM 256/178) OF NH-59 IN THE STATE OF ODISHA	DETAILS OF ROAD MARKINGS AND TRAFFIC IMPACT ATTENUATORS	The CADD™ Where Technology Moves with Time Accr. No. M3111204IN ISO-9001 : 2008 Certified CADD Consulting Engineers Pvt.Ltd. (Architects,Engineers,Surveyors & Consultants) N1/270,IRC Village,Nayapalli,Bhubaneswar-15,Odisha,India Ph - 0674-2553518,Web:www.thecaddconsulting.com	NTS	Drawn. by	D. Asish Rao	Date	05 SEPT 2023
					Chkd. by	Swabhimaan Sahu	Drg. No.	CADD/DBP/RM&T/A2/09/2023-24
					Aprvd. by			

← TO SORODA

TO DARINGBADI →

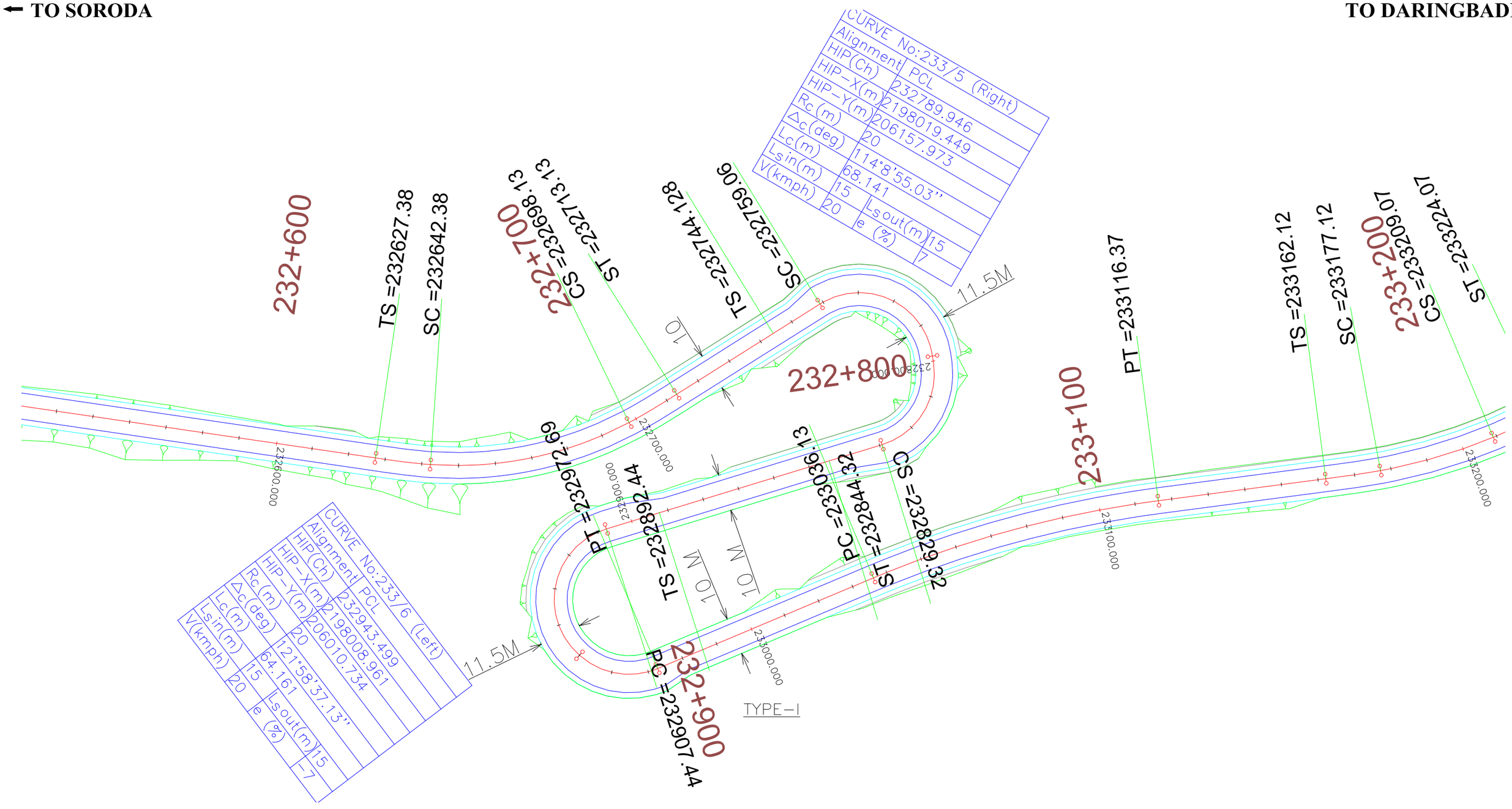

NOTE :

1-All Design Criteria followed for Hair-Pin Bends (Fig 6.16) and clause 6.10.1 of IRC:52-2019 .

2-Minimum design speed should be followed-20 km/h

3-Minimum roadway, width at apex-11.5 m for double-lane(7m)

4-Radius for the inner curve-20m for this project(14.0m minimum)

5-Length of transition curve-15m for this project

6-Gradient-2.5%m(234+418,234+599,238+691,238+960,241+511 This 5 Hairpin bends are exception,Design as per Site Conditions.)

7-Superelevation-7.0% to 10.0%(Varies)

CLIENT	PROJECT NAME	DRAWING TITLE	DESIGN CONSULTANT	SCALE				
EXECUTIVE ENGINEER NH DIVISION BERHAMPUR	CONSULTANCY SERVICES FOR FEASIBILITY STUDY AND PREPARATION OF DETAILED PROJECT REPORT FOR DARINGBADI GHAT PORTION FROM KM 231/000 TO 256/880 (WORK START FROM KM 229/500 TO KM 256/178) OF NH-59 IN THE STATE OF ODISHA	HAIR-PIN BEND DETAILS	The CADD Where Technology Moves with Time Accr. No. M3111204IN ISO-9001 : 2008 Certified CADD Consulting Engineers Pvt.Ltd. (Architects,Engineers,Surveyors & Consultants) N1/270,IRC Village,Nayapalli,Bhubaneswar-15,Odisha,India Ph - 0674-2553518,Web:www.thecaddconsulting.com	NTS	Drawn. by	D. Asish Rao	Date	05 SEPT 2023
					Chkd. by	Swabhimaan Sahu	Drg. No.	CADD/DBP/HPB/A2/10/2023-24
					Aprvd. by			

← TO SORODA

TO DARINGBADI →

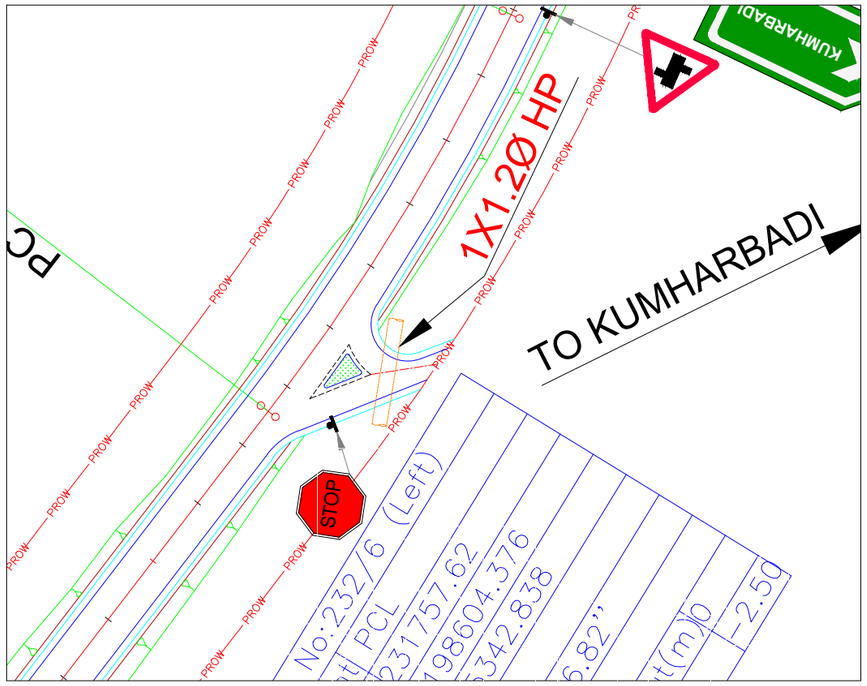

TYPE–I

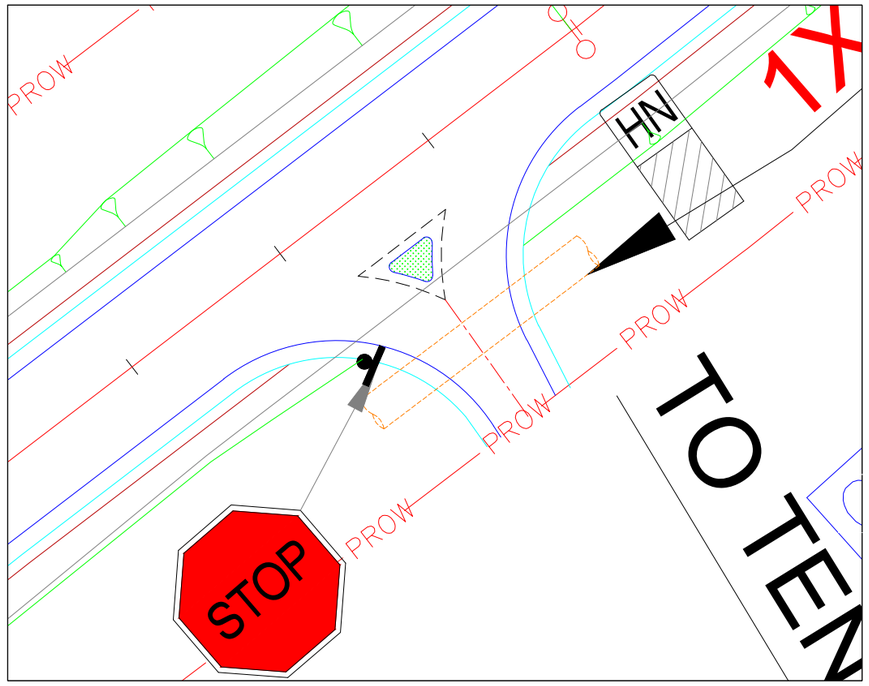

TYPE–II

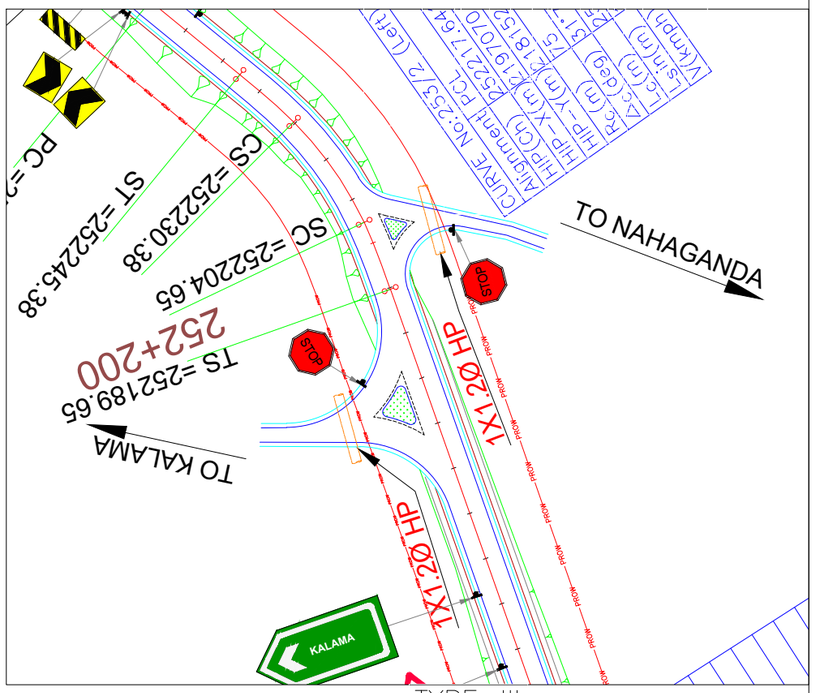

TYPE–III

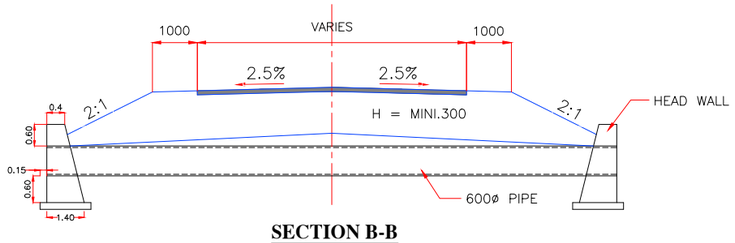

SECTION B-B

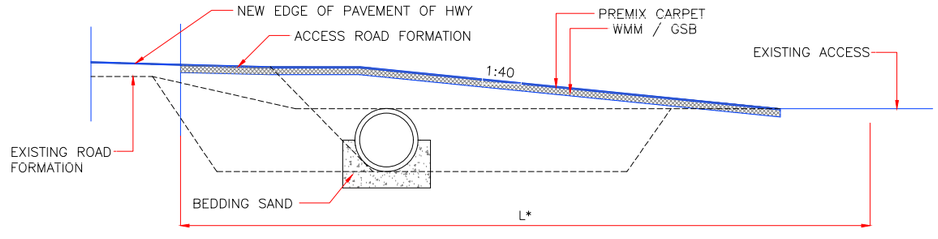

SECTION A-A ACCESS PROFILE

NOTE :

L* = LEVEL OF APPROACH DEPENDS UPON LEVEL DIFFERENCE BETWEEN MAIN CARRIAGEWAY & ACCESS ROAD.

CLIENT	PROJECT NAME	DRAWING TITLE	DESIGN CONSULTANT	SCALE				
EXECUTIVE ENGINEER NH DIVISION BERHAMPUR	CONSULTANCY SERVICES FOR FEASIBILITY STUDY AND PREPARATION OF DETAILED PROJECT REPORT FOR DARINGBADI GHAT PORTION FROM KM 231/000 TO 256/880 (WORK START FROM KM 229/500 TO KM 256/178) OF NH-59 IN THE STATE OF ODISHA	TYPICAL MINOR JUNCTION DETAILS	The CADD™ Where Technology Moves with Time. Accr. No. M31112041N ISO-9001 : 2008 Certified CADD Consulting Engineers Pvt.Ltd. (Architects,Engineers,Surveyors & Consultants) N1/270,IRC Village,Nayapalli,Bhubaneswar-15,Odisha,India Ph - 0674-2553518,Web:www.thecaddconsulting.com	NTS	Drawn. by	D. Asish Rao	Date	05 SEPT 2023
					Chkd. by	Swabhimaan Sahu	Drg. No.	CADD/DBP/TMJ/A2/10A/2023-24
					Aprvd. by			

← TO SORODA

TO DARINGBADI →

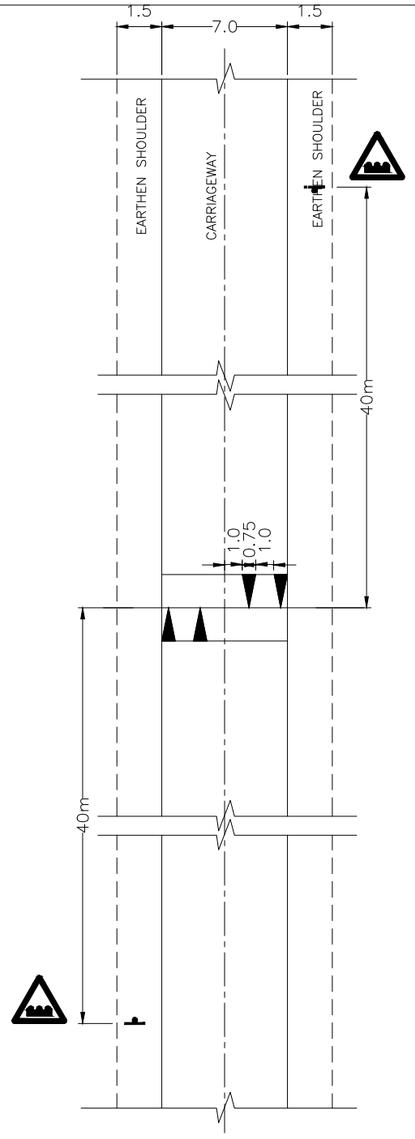

DETAILS OF ROAD HUMP

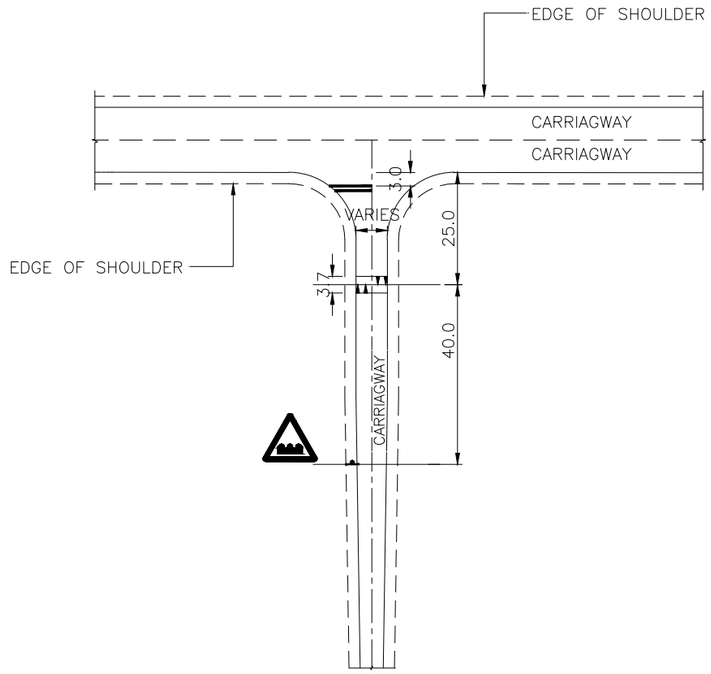

LOCATION OF ROAD HUMP AT MINOR JUNCTIONS

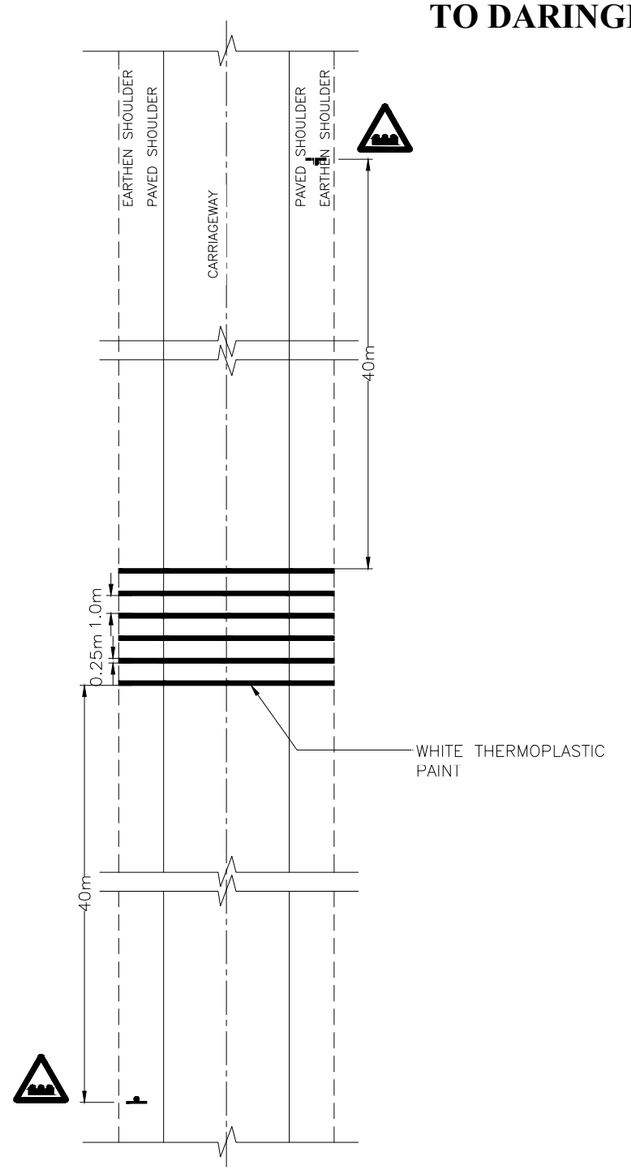

DETAILS OF RUMBLE STRIPS

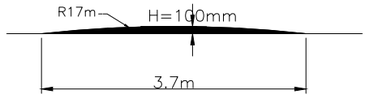

LONGITUDINAL SECTION

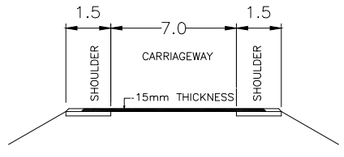

TRANSVERSE SECTION OF ROAD HUMP

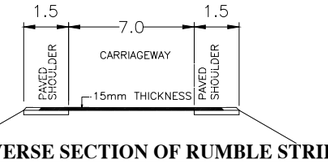

TRANSVERSE SECTION OF RUMBLE STRIPS

CLIENT	PROJECT NAME	DRAWING TITLE	DESIGN CONSULTANT	SCALE				
EXECUTIVE ENGINEER NH DIVISION BERHAMPUR	CONSULTANCY SERVICES FOR FEASIBILITY STUDY AND PREPARATION OF DETAILED PROJECT REPORT FOR DARINGBADI GHAT PORTION FROM KM 231/000 TO 256/880 (WORK START FROM KM 229/500 TO KM 256/178) OF NH-59 IN THE STATE OF ODISHA	DETAILS OF ROAD HUMP AND RUMBLE STRIPS	The CADD™ Where Technology Moves with Time Accr. No. M3111204IN ISO-9001 : 2008 Certified CADD Consulting Engineers Pvt.Ltd. (Architects,Engineers,Surveyors & Consultants) N1/270,IRC Village,Nayapalli,Bhubaneswar-15,Odisha,India Ph - 0674-2553518,Web:www.thecaddconsulting.com	NTS	Drawn. by	D. Asish Rao	Date	05 SEPT 2023
					Chkd. by	Swabhimaan Sahu	Drg. No.	CADD/DBP/RH & RS/A2/11/2023-24
					Aprvd. by			

← TO SORODA

TO DARINGBADI →

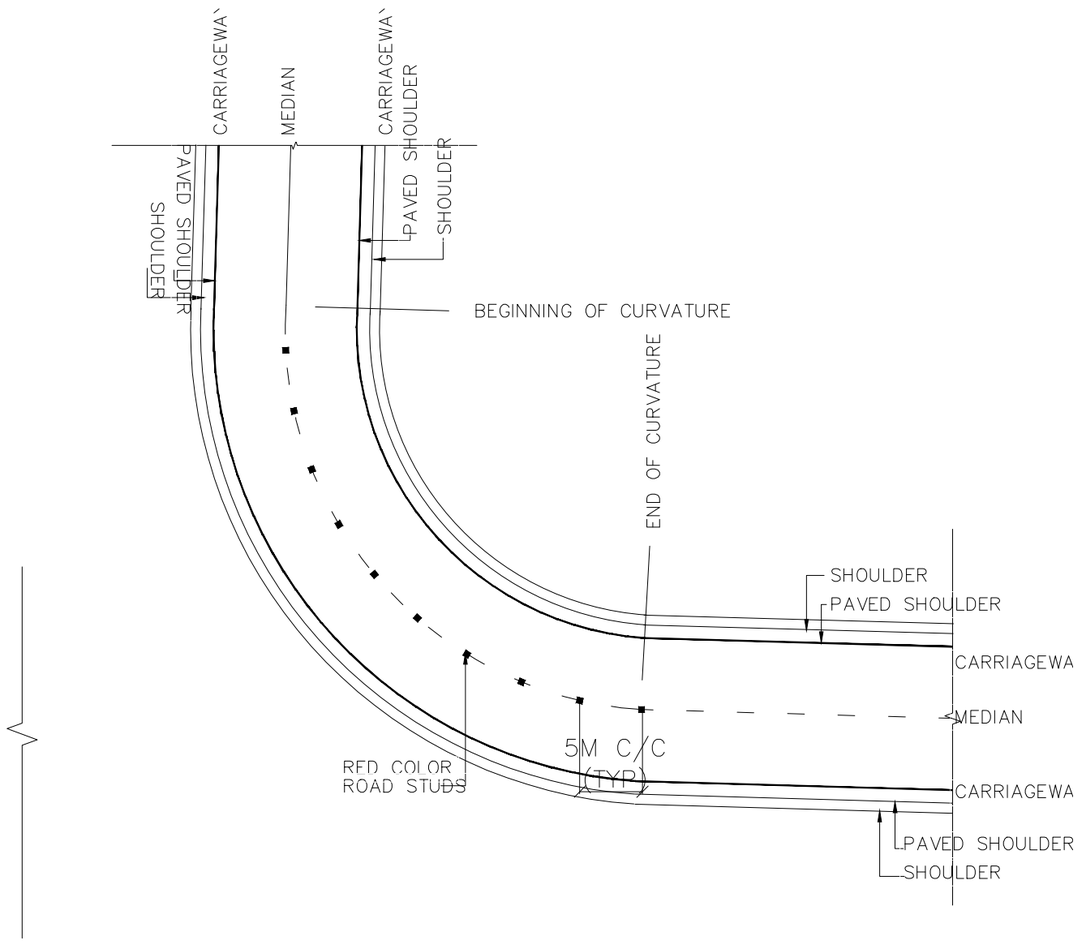

STUDS MARKING AT CURVE LOCATIONS BELOW 700m

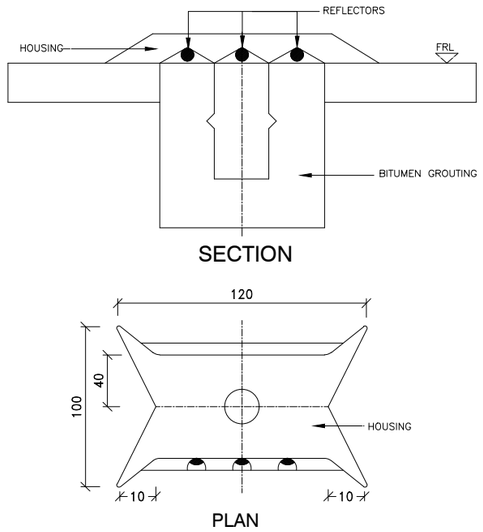

REFLECTIVE STUD DETAIL
(INDICATIVE ONLY)

Table 9.1 (IRC SP–87 2010) Warrants for Road Studs

S.No.	Description of Sections	Length Of Section to be provided with Studs	Spacing of Studs	Location of Studs
1	All Sections of Project Highway having radius of horizontal curve below 700m	Length of horizontal curve including its transitions	5m	At the edge of the carriageway which is nearer to inside of curve.
2	All Sections of Project Highway where vertical grade is steeper than 2.5 percent in plan and rolling terrain	Till the grade comes to 2.5 percent	5m	Outer edge of the carriageway
3	Approaches to all structures where Retaining wall/RE Wall is provided	Length of Approach	5m	Outer edge of the carriageway
4	All entry/exit ramps and acceleration / deceleration lanes	For total length of these ramps or lanes including 20m on either side	5m	Two lines, one at the edge of the carriageway and the other at the center of these ramps or lanes
5	All built–up areas	Length of built–up area	5m	Outer edge of the carriageway

WHERE VERTICAL GRADE IS STEEPER THAN 2.5 PERCENT

NOTES:
1. All Dimensions are in meters unless otherwise indicated.
2. All Road marking details are as per IRC: 35–1997.
3. Reflective pavement marker/road studs shall be prismatic reflective type two way markers confirming to ASTM D4280.

CLIENT	PROJECT NAME	DRAWING TITLE	DESIGN CONSULTANT	SCALE				
EXECUTIVE ENGINEER NH DIVISION BERHAMPUR	CONSULTANCY SERVICES FOR FEASIBILITY STUDY AND PREPARATION OF DETAILED PROJECT REPORT FOR DARINGBADI GHAT PORTION FROM KM 231/000 TO 256/880 (WORK START FROM KM 229/500 TO KM 256/178) OF NH-59 IN THE STATE OF ODISHA	TYPICAL STUD MARKING ON APPROACHES TO GRADE SEPARATOR AND CURVE LOCATIONS	The CADD™ Where Technology Moves with Time. Accr. No. M3111204IN ISO-9001 : 2008 Certified CADD Consulting Engineers Pvt.Ltd. (Architects,Engineers,Surveyors & Consultants) N1/270,IRC Village,Nayapalli,Bhubaneswar-15,Odisha,India Ph - 0674-2553518,Web:www.thecaddconsulting.com	NTS	Drawn. by	D. Asish Rao	Date	05 SEPT 2023
					Chkd. by	Swabhimaan Sahu	Drg. No.	CADD/DBP/GS & CL/A2/12/2023-24
					Aprvd. by			

← TO SORODA

TO DARINGBADI →

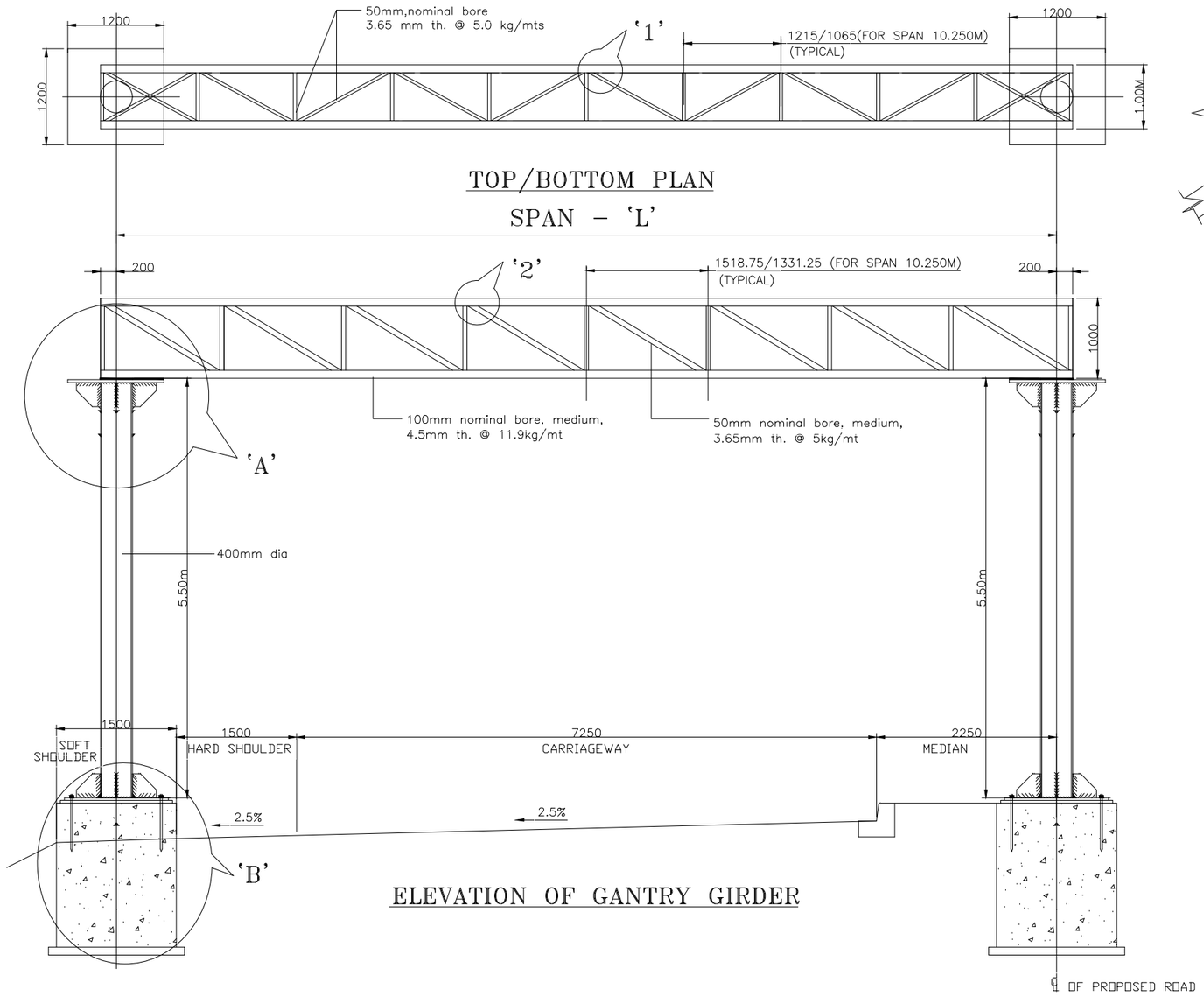

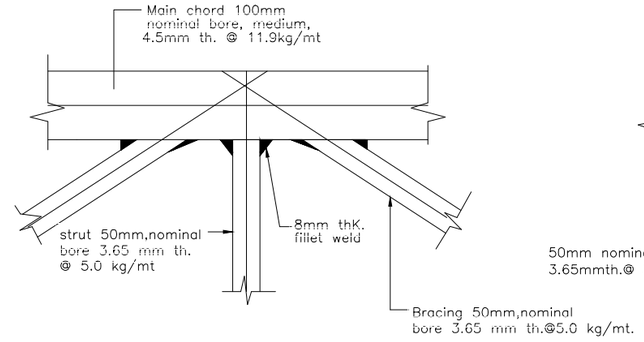

DETAIL–1

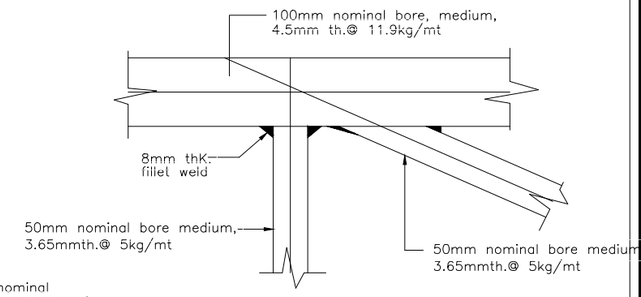

DETAIL–2

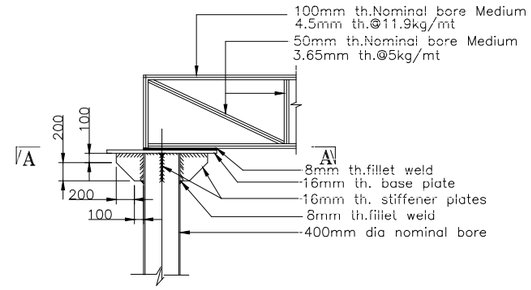

DETAIL – A

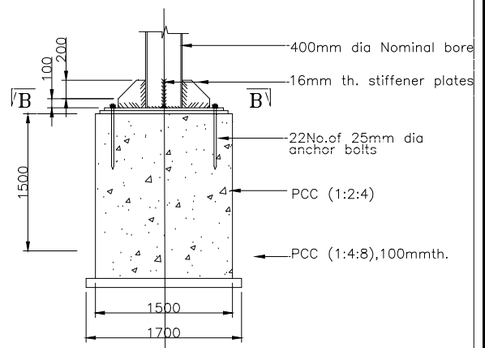

DETAIL – B

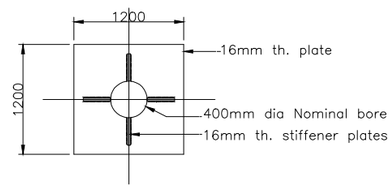

SECTION A–A

PLAN

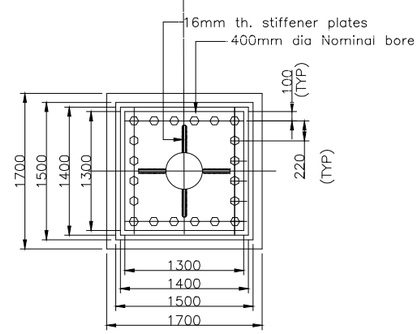

SECTION B–B

COLUMN BASE DETAILS

CLIENT	PROJECT NAME	DRAWING TITLE	DESIGN CONSULTANT	SCALE				
EXECUTIVE ENGINEER NH DIVISION BERHAMPUR	CONSULTANCY SERVICES FOR FEASIBILITY STUDY AND PREPARATION OF DETAILED PROJECT REPORT FOR DARINGBADI GHAT PORTION FROM KM 231/000 TO 256/880 (WORK START FROM KM 229/500 TO KM 256/178) OF NH-59 IN THE STATE OF ODISHA	TYPICAL DRAWING FOR GANTRY ARRANGEMENT	The CADD™ Where Technology Moves with Time Accr. No. M3111204IN ISO-9001 : 2008 Certified CADD Consulting Engineers Pvt.Ltd. (Architects,Engineers,Surveyors & Consultants) N1/270,IRC Village,Nayapalli,Bhubaneswar-15,Odisha,India Ph - 0674-2553518,Web:www.thecaddconsulting.com	NTS	Drawn. by	D. Asish Rao	Date	05 SEPT 2023
					Chkd. by	Swabhimaan Sahu	Drg. No.	CADD/DBP/GR/A2/12/2023-24
					Aprvd. by			

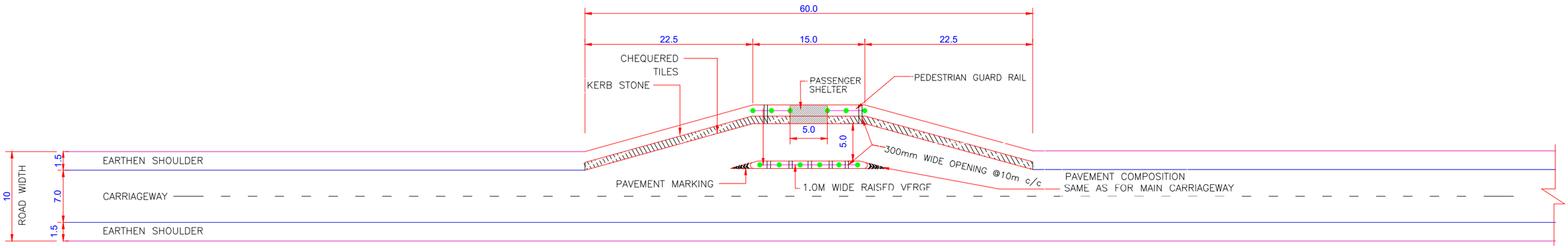

LAYOUT FOR PICK-UP BUS STOP IN RURAL AREA

(SCALE 1:400)

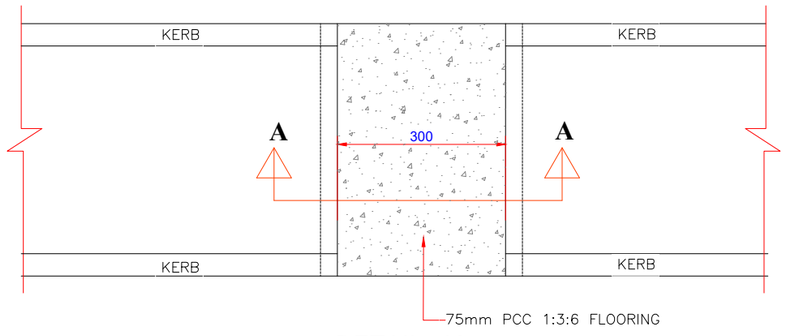

DETAIL - X

(SCALE 1:20)

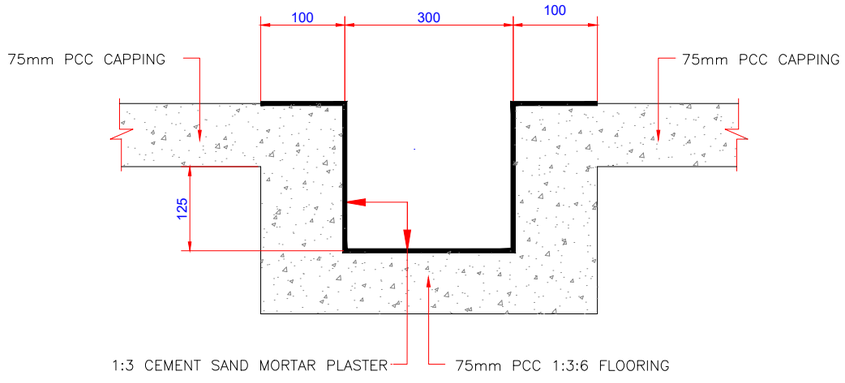

SECTION A-A

(SCALE 1:20)

GOOD FOR CONSTRUCTION

CLIENT	PROJECT NAME	DRAWING TITLE	DESIGN CONSULTANT	SCALE				
EXECUTIVE ENGINEER NH DIVISION BERHAMPUR	CONSULTANCY SERVICES FOR FEASIBILITY STUDY AND PREPARATION OF DETAILED PROJECT REPORT FOR DARINGBADI GHAT PORTION FROM KM 231/000 TO 256/880 (WORK START FROM KM 229/500 TO KM 256/178) OF NH-59 IN THE STATE OF ODISHA	**TYPICAL DETAILS OF BUS BAY**	The CADD Where Technology Moves with Time Accr. No. M3111204IN ISO-9001 : 2008 Certified CADD Consulting Engineers Pvt.Ltd. (Architects,Engineers,Surveyors & Consultants) N1/270,IRC Village,Nayapalli,Bhubaneswar-15,Odisha,India Ph - 0674-2553518,Web:www.thecaddconsulting.com	**AS SHOWN**	Drawn. by	**Er. N S Kumar**	Date	05 MAR 2019
					Chkd. by	**Er. M R Koniki**	Drg. No.	CADD/NBP/BB/A2/13/2018-19
					Aprvd. by			

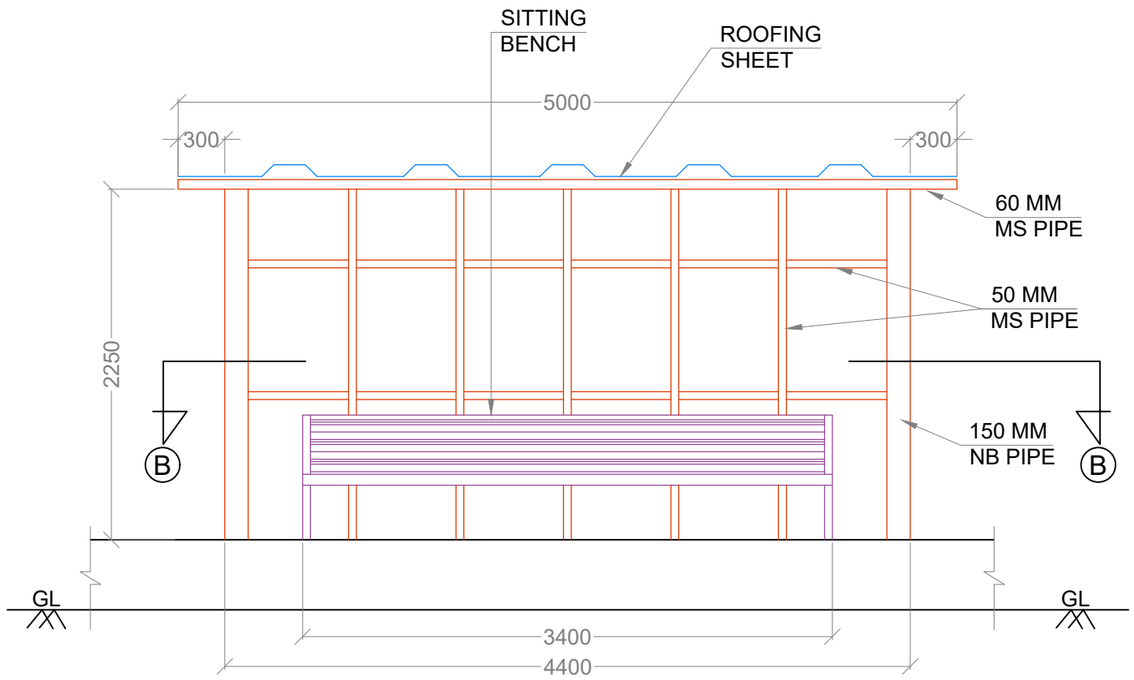

ELEVATION

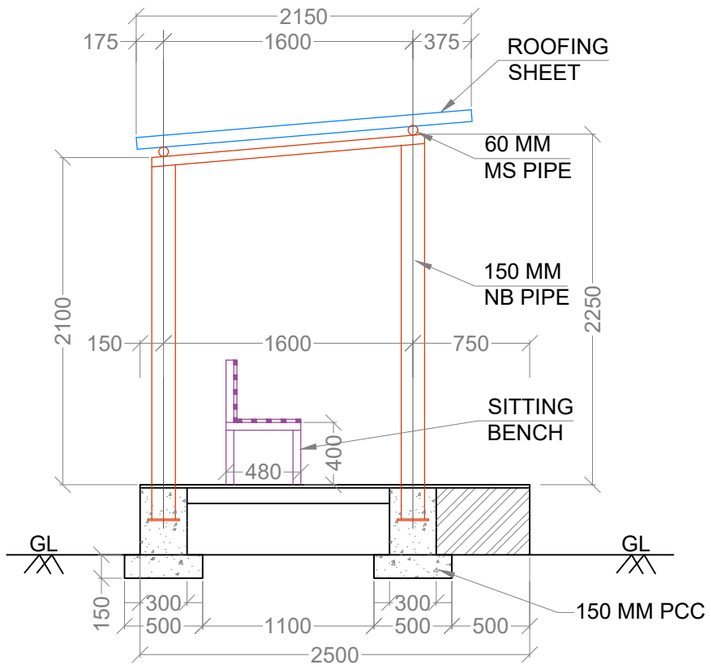

SECTION-AA

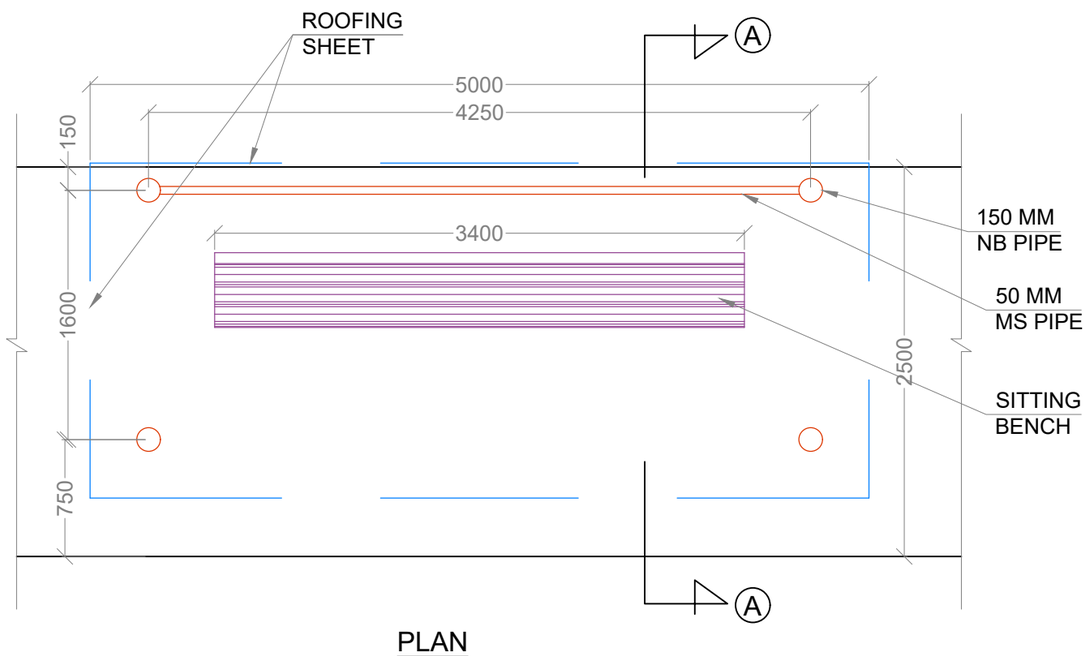

PLAN

CLIENT	PROJECT NAME	DRAWING TITLE	DESIGN CONSULTANT	SCALE				
EXECUTIVE ENGINEER NH DIVISION BERHAMPUR	CONSULTANCY SERVICES FOR FEASIBILITY STUDY AND PREPARATION OF DETAILED PROJECT REPORT FOR DARINGBADI GHAT PORTION FROM KM 231/000 TO 256/880 (WORK START FROM KM 229/500 TO KM 256/178) OF NH-59 IN THE STATE OF ODISHA	**BUS SHELTER DETAILS**	The CADD Where Technology Moves with Time Accr. No. M3111204IN ISO-9001 : 2008 Certified CADD Consulting Engineers Pvt.Ltd. (Architects,Engineers,Surveyors & Consultants) N1/270,IRC Village,Nayapalli,Bhubaneswar-15,Odisha,India Ph - 0674-2553518,Web:www.thecaddconsulting.com	NTS	Drawn. by	**Er. N S Kumar**	Date	24 JAN 2019
					Chkd. by	**Er. M R Koniki**	Drg. No.	CADD/RBP/DA/DR/01
					Aprvd. by			